WG-6C Red-E-Clip® Wall Guard

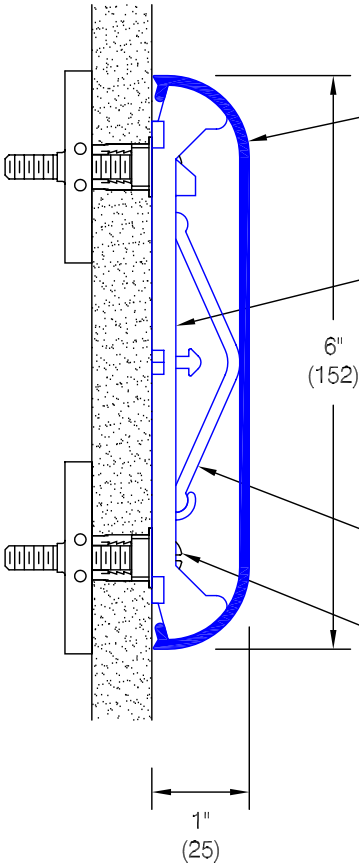

Features:

- Class A fire rated wall guard
- Molded end caps
- Molded outside corners
- Stock length 12'-0" (3658)

Finishes:

- Manufacturer's standard colors
- Custom colors available
- Grooved (see WD.29.1)
- Accent strips (see WD.31.1)

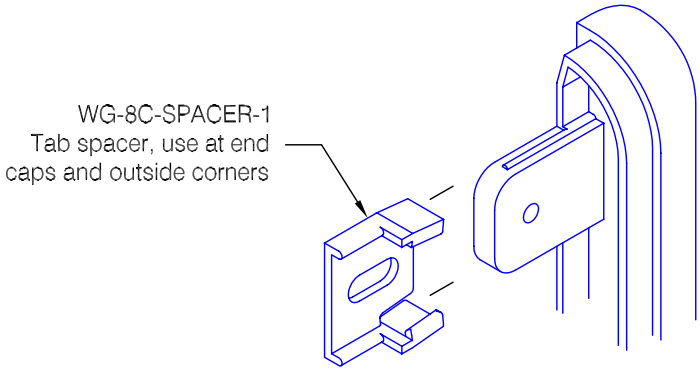

Spacer Detail

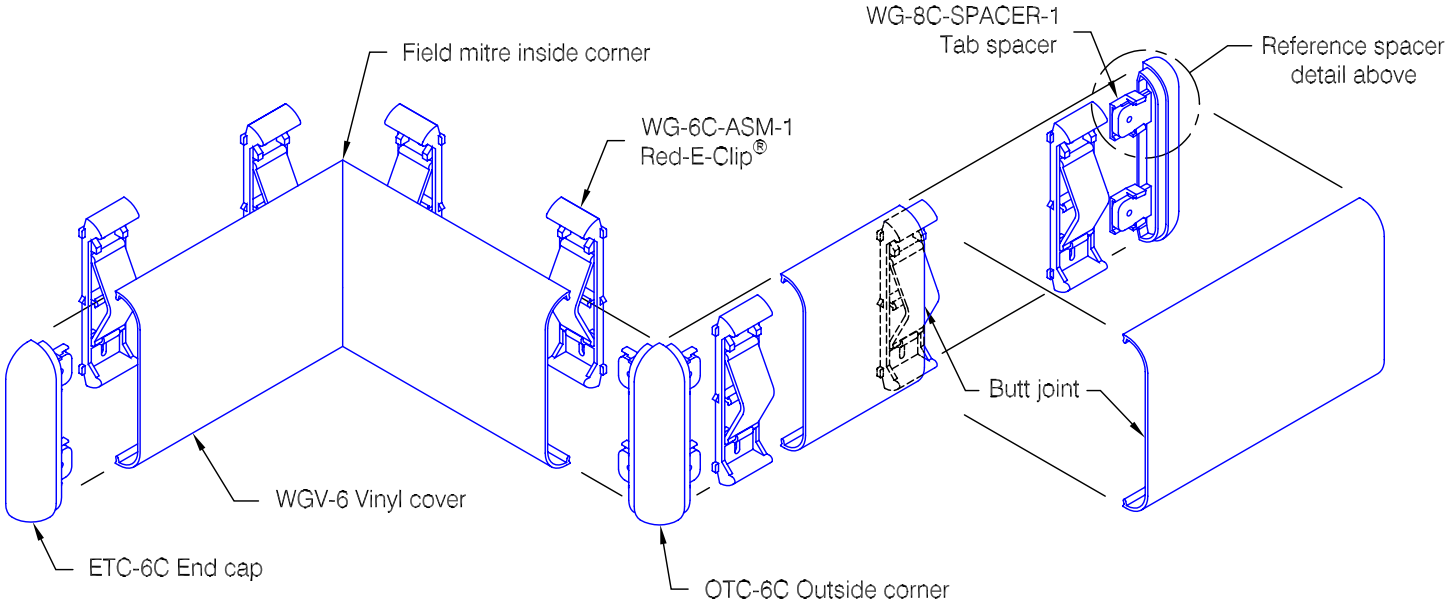

Pawling Corporation reserves the right to discontinue a design or modify an existing design without prior notice

Customer :	*Project :*	WD.27.1c
Architect :	*Sales Rep :*	